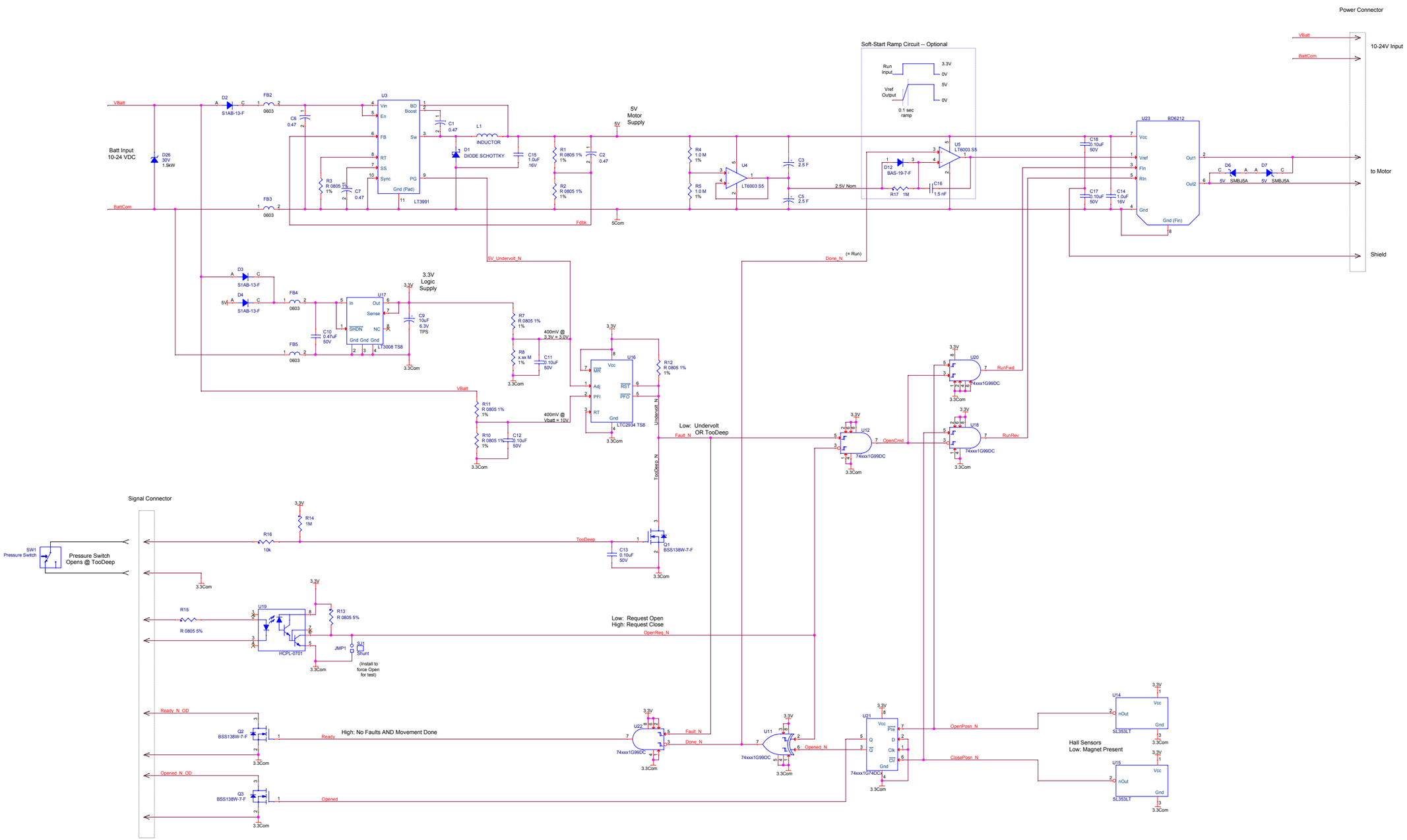

MBARI 7700 Sandholdt Rd Moss Landing CA 95039 831-775-1700					
Schematic, Motor Control, Motorized VB Isolation Valve, Tethys LRAUV					
Ed Mellinger meed@mbari.org	Size D	Dwg No 10020689	Sheet 1 of 1	Rev 0	Date Wednesday, March 28, 2012
\\Tornado\projectlibrary\900739 LRAUV\Project.Documents\Electronics\VB Control\MotorizedVBIsoValve					